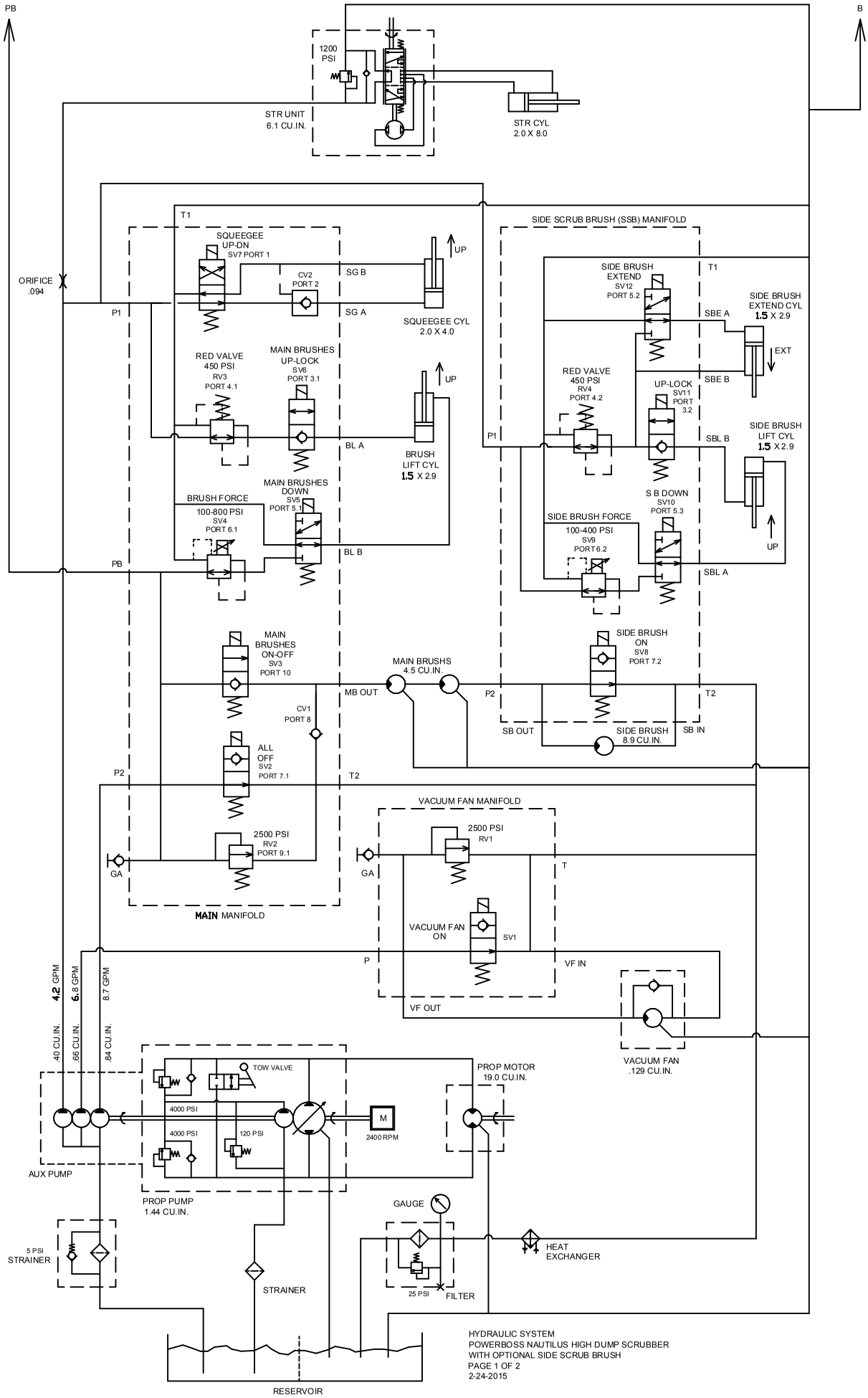

HYDRAULIC SYSTEM
POWERBOSS NAUTILUS HIGH DUMP SCRUBBER
WITH OPTIONAL SIDE SCRUB BRUSH
PAGE 1 OF 2
2-24-2015